Wayne Dalton™

THERMOTITE® 800C

INSULATED ROLLING STEEL DOORS

INSULATED ROLLING STEEL DOORS CUT YOUR TOTAL ENERGY COST

The Wayne Dalton ThermoTite® 800C Insulated Rolling Service Door is designed to meet the tough requirements of virtually any commercial or industrial application, with the added advantage of energy efficiency.
The ThermoTite® doors offer flexibility in substrate materials with choices of galvanized or primed steel, stainless steel, or aluminum.

Color options range from our four standard factory-finish colors to a full range of approximately 200 RAL powder coat choices. Foamed-in-place polyurethane insulation in each slat promotes energy savings and building comfort.

- SIZES UP TO 42' WIDE AND 30' HIGH
- INSULATION R-VALUE* = 7.7
- 24-GAUGE STEEL STANDARD
- FLAT 3" INSULATED SLAT
- WIND LOAD UP TO 55 PSF

THERMOTITE® 800C

STANDARD FEATURES OVERVIEW

THERMAL EFFICIENCY

R-VALUE*	7.7

CONSTRUCTION

MAX WIDTH	42' (12,802 mm)
MAX HEIGHT	30' (9,144 mm)
MOUNTING	Face mount; between jambs
OPERATION	Chain hoist; motor recommended on door sizes where door weight exceeds hoist effort†
CURTAIN	3" foamed-in-place polyurethane insulated galvanized steel flat slats (#34 profile), primed and painted gray, white, beige or brown; 24-gauge steel front / 24-gauge steel backer with alternating endlocks; STC value=22
LOCKING	Chain holder, suitable for padlocking, on chain operated doors
BOTTOM BAR	Galvanized steel double angle with weatherseal and insulation
GUIDES	Three angle steel; factory-painted black.
BRACKETS	1/4" steel plates with permanently sealed ball bearing, factory-painted black
COUNTERBALANCE	Steel pipe, painted factory black, of adequate size. Oil tempered, 20,000 cycle helical springs
HOOD	24-gauge galvanized steel round hood with internal weatherstrip; primed and painted gray, white, brown or beige
WIND LOAD	+/- 20 psf standard

WARRANTY

TERMS	Twenty four (24) month limited warranty

†Reference door chart on website or contact plant for more information.
**Wayne Dalton uses a calculated door section R-value for our insulated doors.*

OPTIONS

- Vision slats/panels
- Safety edges
- Drop stop device
- Exhaust ports
- Sloping bottom bars
- Powder coated
- Motor operation
- Cable reels
- Mullions
- Thru-wall operation
- Stainless steel or aluminum finish
- 18, 20 and 22-gauge front slats

IECC AIR INFILTRATION PACKAGE OPTION:

- Guide cover and cap
- Dual brush guide seal
- Lintel seal
- Bottom weatherseal

ICC ES LISTED

Popular in both interior and exterior applications, the Wayne Dalton ThermoTite® 800C Insulated Rolling Service Door features a galvanized, pre-painted curtain of 24-gauge steel.

ThermoTite® 800C doors are designed to withstand wind loads of up to 20 psf standard. Optional wind load ratings of up to 55 psf is available to meet Florida and Dade County wind load requirements.

MATERIALS AND CONSTRUCTION

The ThermoTite® 800C features a strong double-angle bottom bar that reinforces the lower edge of the curtain against wind pressure and permits varied lock, astragal, and safety edge options. This bottom bar is designed for easy installation and does not require fasteners protruding into the guide openings, so the bottom bar does not interfere with door operation.

The counterbalance assembly consists of a spring barrel which serves as load-carrying beam. It encases the counterbalance mechanism and provides the axis around which the curtain coils. If required, barrel rings of malleable iron or stamped steel may be provided to assure proper counterbalance installation. Oil-tempered, torsion-type counterbalance springs are wound from heat-treated steel, providing accuracy in balancing the door. Barrel plugs connect the ends of the springs to the barrel and tension rod. A tension rod of steel shafting holds the fixed ends of the springs and carries torsion load of spring counterbalance.

The spring tension adjusting wheel is normally mounted outside the bracket on the end of tension rod. An inside adjusting wheel for tight side-room applications is available in limited sizes.

Wind load options available

Wayne Dalton Certified windSAFE

800C ROLLING STEEL

FINISH OPTIONS

White

Gray
(optional G-90)

Beige

Brown

SLAT PROFILE

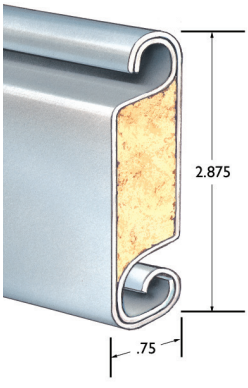

STANDARD WEATHERSEAL APPLICATIONS

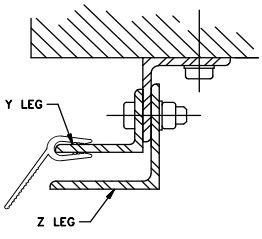

3-ANGLE STRUCTURAL GUIDE
NO WINDBAR

To close space between curtain and guides at jambs, flexible strip on guides contacts flat surface of curtain.

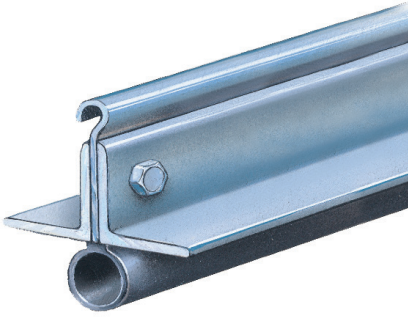

Bottom bar with weatherseal

GENERAL OPERATING CLEARANCES

WIDTH A	OPENING HEIGHT																				
	10'0"			10'0" TO 11'0"			11'0" TO 13'6"			13'6" TO 17'6"			13'6" TO 19'0"			17'6" TO 22'0"			19'0" TO 22'0"		
	X & Y	R	L	X & Y	R	L	X & Y	R	L	X & Y	R	L	X & Y	R	L	X & Y	R	L	X & Y	R	L
FACE MOUNTING																					
CHAIN HOIST OPERATED																					
TO 24'0"	18-1/2"	9 1/16"	7 1/16"	20"	9 1/16"	7 1/16"	22"	9 1/16"	7 1/16"												
TO 16'0"										24"	9 1/16"	7 1/16"				26"	9 1/16"	7 1/16"			
16'0" TO 24'0"													24"	9 1/16"	7 1/16"				26"	9 1/16"	7 1/16"
MOTOR OPERATED																					
TO 24'0"	18-1/2"	9 1/16"	7 1/16"	20"	9 1/16"	7 1/16"	22"	9 1/16"	7 1/16"												
TO 16'0"										24"	9 1/16"	7 1/16"				26"	9 1/16"	7 1/16"			
16'0" TO 24'0"													24"	9 1/16"	7 1/16"				26"	9 1/16"	7 1/16"

NOTE: Dimensions are for general reference only and not for construction purposes.

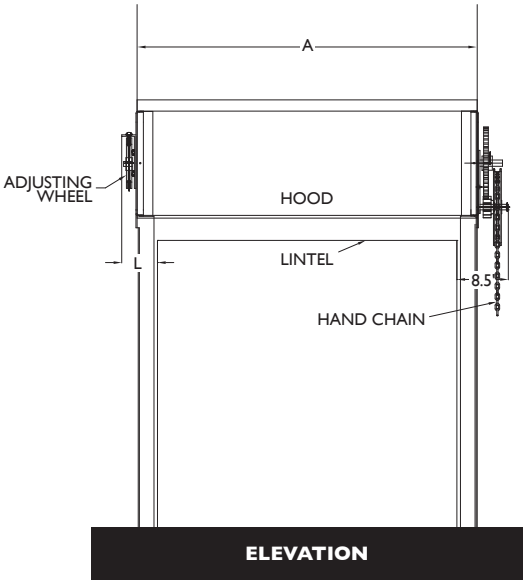

CHAIN HOIST OPERATION

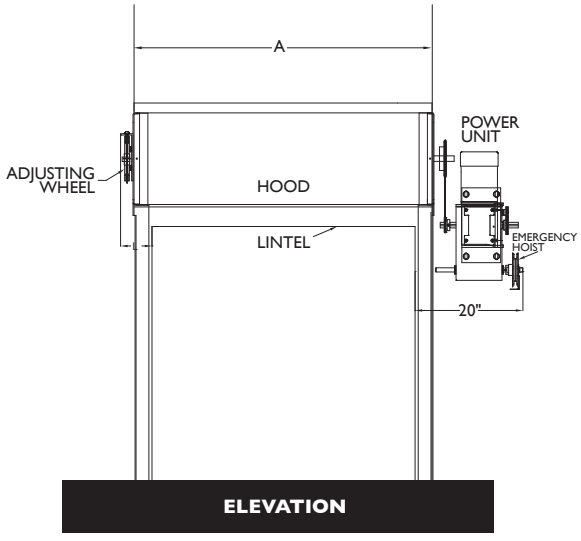

WALL MOUNTED POWER UNIT

Architect Resource

Scan the QR code to go to our Architect Resource Center. In this tool, you will quickly find all of the specifications, drawings and documents you need for your project.

Wayne Dalton™

DISTRIBUTED BY:

2501 S. State Hwy. 121 Bus., Ste 200
Lewisville, TX 75067

wayne-dalton.com

© 2025 Wayne Dalton, a Division of Overhead Door Corporation. Consistent with our policy of continuing product improvement, we reserve the right to change product specifications without notice or obligation. Item W900-1501 02/25